EXR12-1400

EFORT

EXR12-1400,
Maxium payload 12 kg with maxium reach 1391 mm.

Highlights

Developed and designed based on EFORT's mature platform, it is stable and reliable;
Equipped with a battery-free encoder, featuring a fully sealed design, fully wrapped cables, and closed-loop explosion-proof control with a complete cavity, it is safer;
Explosion protection level: Ex db ib pxb IIC T6 Gb；Ex ib pxb tb IIIC T80℃ Db. It can be used in hazardous environments in Zone 1 and Zone 21.

Applications

It can be applied to dust or gas explosion-proof scenarios in handling, sorting, assembly, grinding, polishing, spraying, and other applications.

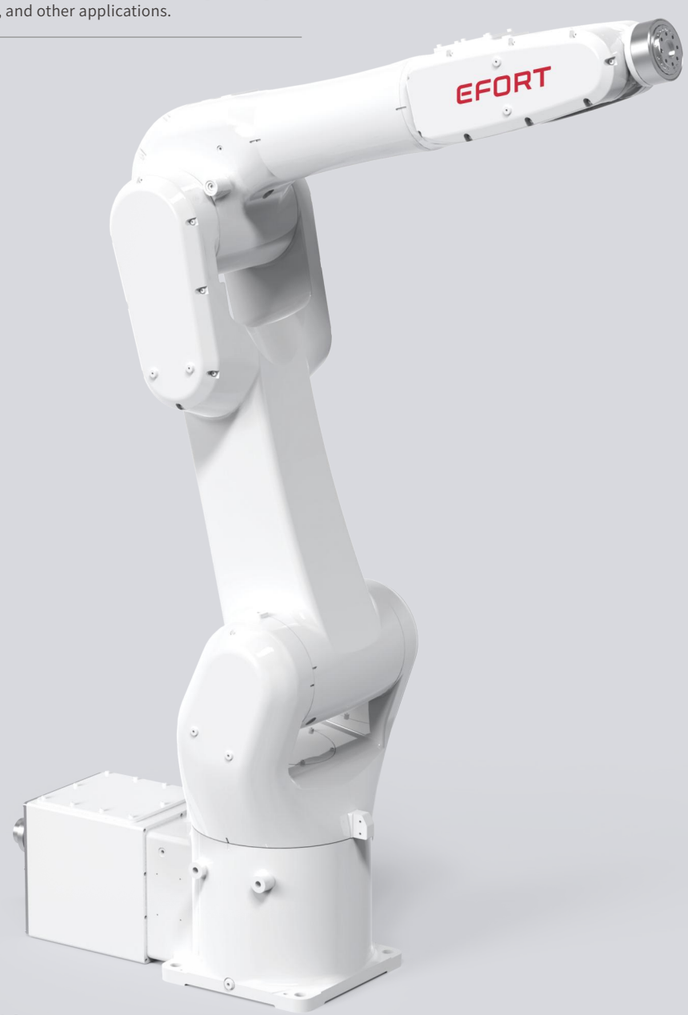

EFORT Intelligent Robot Co., Ltd.
PHONE: (00 86) 400-052-8877
ADDRESS: No. 96, Wanchun East Road, Wuhu, China (Anhui) Pilot Free Trade Zone
WWW.EFORT.COM.CN

SPECIFICATIONS

Model		EXR12-1400
Type		Articulated
Controlled axes		6 Axes
Max. payload on wrist		12 kg
Repeatability		±0.03 mm
Robot weight		92 kg
Reach		1391 mm
Robot IP grade		IP65
Cabinet IP grade		IP54
Explosion protection level		Ex db ib pxb IIC T6 Gb Ex ib pxb tb IIIC T80℃ Db
Drive mode		AC servo drive
Installation		Floor
Installation enviroment	**Ambient temperature**	0~45 ℃
	Ambient humidity	RH≤80%(No dew nor frost allowed)
	Vibration acceleration	4.9 m/s^2 (<0.5 G)

Allowable load moment at wrist	**J4**	25 N·m
	J5	25 N·m
	J6	12 N·m
Allowable load inertia at wrist	**J4**	0.78 kg·m^2
	J5	0.78 kg·m^2
	J6	0.3 kg·m^2
Maximum speed	**J1**	200°/sec
	J2	180°/sec
	J3	220°/sec
	J4	400°/sec
	J5	420°/sec
	J6	600°/sec
Motion range	**J1**	±170°
	J2	+100°/-130°
	J3	+193°/-75°
	J4	±190°
	J5	±120°
	J6	±360°

OPERATING SPACE

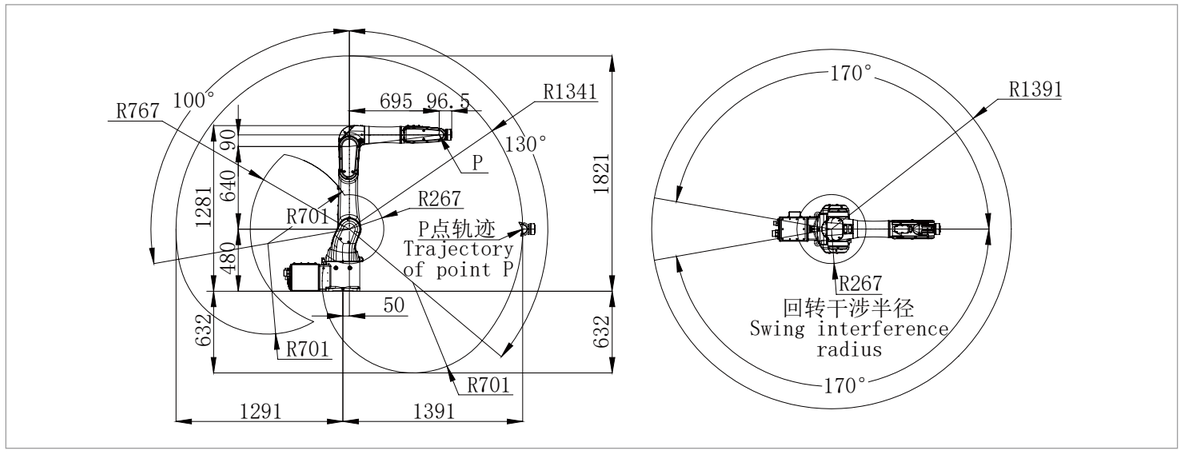

BASE MOUNTING SIZE

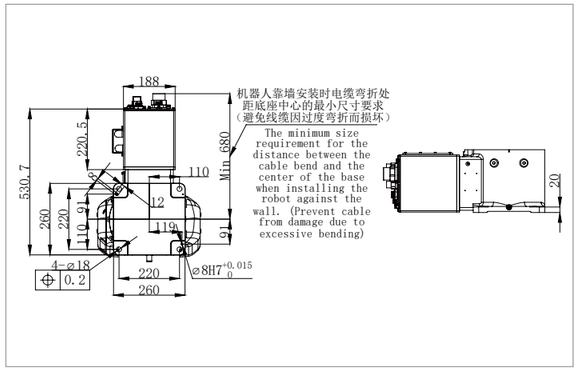

END FLANGE MOUNTING SIZE

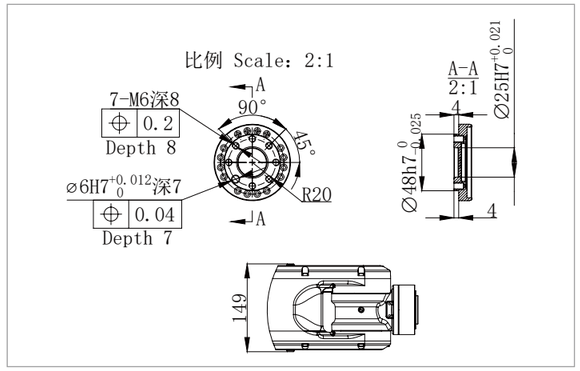

*The final interpretation right belongs to EFORT Intelligent Robot Co., Ltd. Any updates will be made without prior notice.

Information Release Time 2025/11